KONNEXLINQ

4K@60Hz 70m HDBaseT Extender with Loop Out

KLQ-4KHDBT-70

User Manual

Version: V1.0.0

Introduction

This product is a 4K@60Hz 4:4:4 HDBaseT extender using DSC compression for superior video quality. It supports HDMI 2.0 and HDCP 2.3 standards, ensuring wide compatibility. The extender transmits 4K@60Hz signals up to 70m over a single Cat 6A/7 cable. The transmitter includes two DIP switches for RS232 functions (pass-through and firmware upgrade), test pattern control, and EDID management. The receiver includes one DIP switch for RS232 functions (pass-through and firmware upgrade). Additional features include HDMI loop-out on the transmitter, audio de-embedding on the receiver, bidirectional IR pass-through, and bi-directional PoC for flexible power supply.

Features

- Supports resolutions up to 4K@60Hz 4:4:4 using DSC compression technology for superior image quality.
- HDCP 2.3 compatibility.
- Supports transmitting 4K signal up to 70m/230ft via a single Cat 6A/7 cable.
- Supports HDMI loop-out.
- Supports EDID management via the DIP switch on transmitter side.
- Supports test pattern function, and can be enable/disable via the DIP switch on transmitter side.
- Supports bi-directional RS232 pass-through.
- Supports de-embed audio output on receiver side.
- Supports bi-direction IR Pass-through.
- Support bi-direction PoC, one power source is needed to be connected to the transmitter or receiver to power both units.
- Supports firmware upgrade for easy maintenance.

Package Contents

- 1 x Transmitter
- 1 x Receiver
- 1 x DC 18V Power Adapter with US Pins
- 1 x IR Emitter
- 1 x IR Receiver
- 2 x Phoenix Male Connector (3.5mm, 3-Pin)
- 1 x Phoenix Male Connector (3.5mm, 5-Pin)
- 4 x Mounting Bracket (with Screws)

Application Diagram

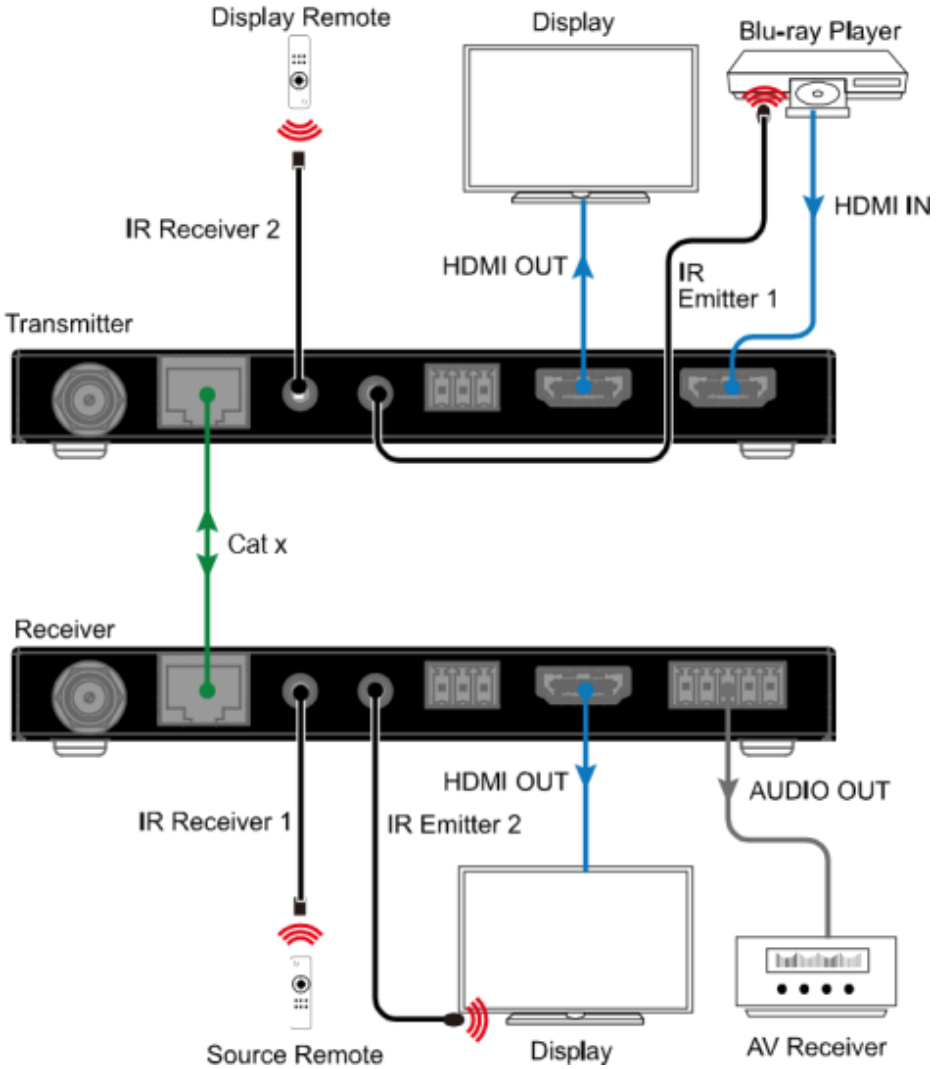

Specifications

Technical

Input / Output Signal Type	HDMI 2.0 with 4K@60Hz 4:4:4, HDCP 2.3

Input / Output Resolution	**VESA:** 800 x 600[6], 1024 x 768[6], 1280 x 768[6], 1280 x 800[6], 1280 x 960[6], 1280 x 1024[6], 1360 x 768[6], 1366 x 768[6], 1440 x 900[6], 1600 x 900[6], 1600 x 1200[6], 1680 x 1050[6], 1920 x 1200[6], 1080P[7,8,9], 2048 x 1152[6], 2560 x 1440[5,6], 2560x1600[6], 3440 x 1440[6], 3840x1080[6] **CTA:** 1280x720P[5,6,7,8,9], 1920x1080P[1,2,3,5,6], 3840x2160P[1,2,5,6], 4096x2160P[5,6] 1 = at 24 (23.98) Hz, 2 = at 25 Hz, 3 = at 30 (29.97) Hz, 4 = at 48 Hz, 5 = at 50 Hz, 6 = 60 (59.94) Hz, 7 = 75Hz, 8 = 100Hz, 9 = 120Hz
Maximum Data Rate	18Gbps
Audio Format Supported	HDMI IN/OUT: Up to 7.1ch, including PCM 2.0/5.1/7.1ch, Dolby Digital, Dolby Digital Plus, Dolby TrueHD, Dolby Atmos,

Technical

	DTS 5.1, DTS-HD Master Audio and DTS:X. AUDIO OUT: PCM 2.0

General

Operating Temperature	0°C to 45°C (32°F to 113°F)
Storage Temperature	-20°C to 70°C (-4°F to 158°F)
Humidity	10% to 90%, non-condensing
ESD Protection	Human-body Model: ±8kV (Air-gap discharge)/±4kV (Contact discharge)
Power Supply	18V/1A
Power Consumption (Max)	10.98W
Device Dimension (W x H x D)	Transmitter/Receiver: 136.4mm x 15.2mm x 74.2mm / 5.37" x 0.60" x 2.92"
Product Weight	Transmitter / Receiver: 0.23kg / 0.51lb

Transmission Distance:

Note: T568B straight-through Category cable is recommended.

Cable Type	Range	Supported Video
Cat 5e/6	60m/197ft	1080P@60Hz 4:4:4 4K@30Hz 4:4:4 4K@60Hz 4:4:4
Cat 6A/7	70m/230ft	

HDMI	Input / Output: 15m / 49ft	1080P@60Hz 4K@30Hz 4:4:4
	Input / Output: 10m / 33ft	4K@60Hz 4:4:4

Panel Description

Transmitter

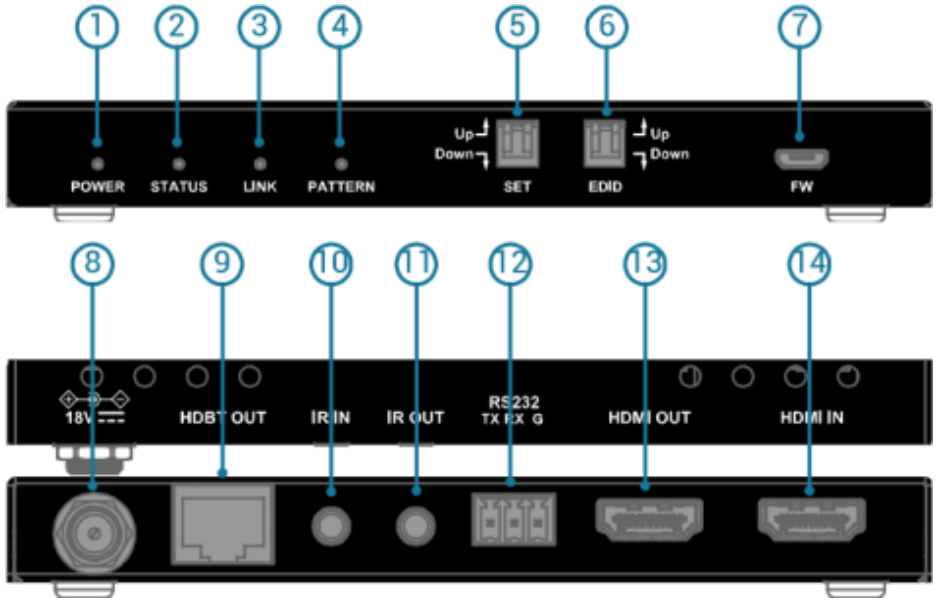

1	POWER LED	On: The device is powered on. Off: The device is powered off.
2	STATUS LED	Blinking: The device is working properly.
#	**Name**	**Description**
#	**Name**	**Description**
		Off: The device is not working properly or the device is off.
3	LINK LED	On: HDBT link is normal. Off: No HDBT link or link error.
4	PATTERN LED	On: Test pattern function is set to on. In this mode, the HDMI IN source is replaced with a test signal, and the display shows a red image. Off: Test pattern function is set to off.

5	SET	2-pin DIP switch. It is used to set RS232 function (pass-through or Valens firmware upgrade), and enable/disable test pattern mode. Detail information, please refer to “DIP Switch Control” section.
6	EDID	2-pin DIP switch. It is used to manage EDID. Detail information, please refer to “DIP Switch Control” section.
7	FW	Micro-USB port, used for MCU firmware upgrade.
8	18V	Connect to the power adapter provided. With twoway PoC, one power adapter is needed to be connected to the transmitter or receiver to power both units.
9	HDBT OUT	Connect to HDBT IN port of the receiver.
10	IR IN	Connect to the provided IR receiver.
11	IR OUT	Connect to the provided IR emitter.
12	RS232	Connect to a RS232 enabled device.
13	HDMI OUT	Connect to an HDMI display for loop-out.
14	HDMI IN	Connect to an HDMI source.

Receiver

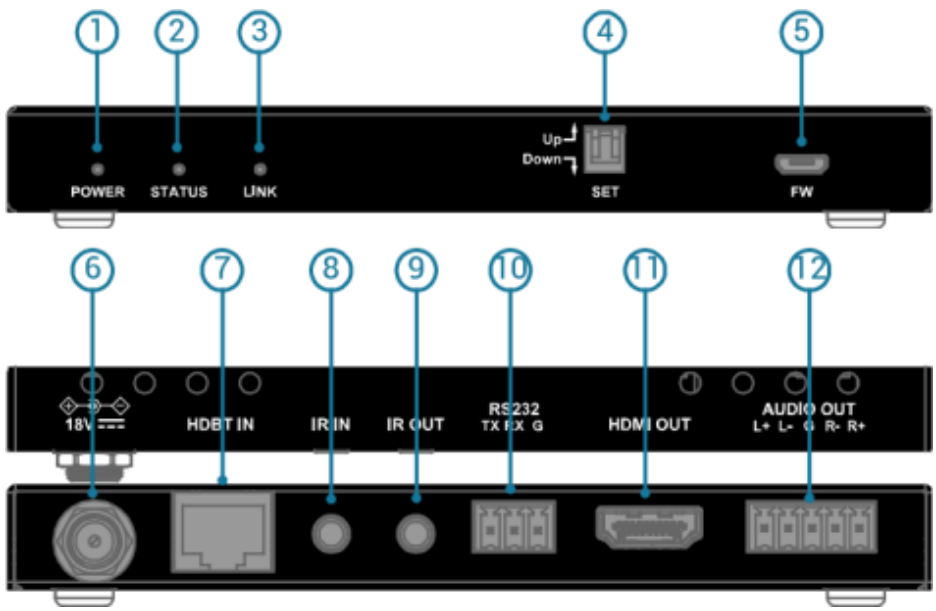

1	POWER LED	On: The device is powered on.
#	**Name**	**Description**
		Off: The device is powered off.
2	STATUS LED	Blinking: The device is working properly. Off: The device is not working properly or powered off.
3	LINK LED	On: HDBT link is normal. Off: No HDBT link or link error.
4	SET	2-pin DIP switch. It is used to set RS232 function (pass-through or Valens firmware upgrade), and enable/disable test pattern mode. Detail information, please refer to “DIP Switch Control” section.
5	FW	Micro-USB port, for MCU firmware upgrade.
6	18V	Connect to the power adapter provided. With twoway PoC, one power adapter is needed to be connected to the transmitter or receiver to power both units.
7	HDBT IN	Connect to the HDBT OUT port of the transmitter.
8	IR IN	Connect to the provided IR receiver.
9	IR OUT	Connect to the provided IR emitter.
10	RS232	Connect to RS232 enabled device.
11	HDMI OUT	Connect to an HDMI display.
12	AUDIO OUT	Connect to an audio receiver (e.g., AV Receiver) for audio de-embedding output.
#	**Name**	**Description**

DIP Switch Control

The transmitter is equipped with a two-pin DIP switch (“SET”) for configuring RS232 functions and enabling or disabling test pattern mode, and another twopin DIP switch (“EDID”) for EDID management. The receiver is equipped with a two-pin DIP switch (“SET”) for configuring RS232 functions. Please refer to the table below for detailed settings:

Transmitter: SET:

Test Pattern OFF	Up	-
Test Pattern ON	Down	-
RS232 Pass-through	-	Up
HDBaseT FW Update	-	Down
Function	**Pin 1**	**Pin 2**

EDID:

Copy from RX HDMI OUT	Up	Up
Copy from TX HDMI OUT	Up	Down
Fixed 4K@60Hz 2CH	Down	Up
Fixed 1080P@60Hz 2CH	Down	Down
Function	**Pin 1**	**Pin 2**

s

Receiver:

SET:

RS232 Pass-through	-	Up
HDBaseT FW Update	-	Down
Function	**Pin 1**	**Pin 2**

Note:

- "-" indicates the position of this pin doesn't affect the current function.
- Both Valens firmware of the transmitter and receiver can be upgraded through RS232 port of the transmitter/receiver. Set the Pin 2 of the "SET" DIP switch on the transmitter/receiver to "Down" position. Connect a PC to RS232 port of the transmitter/receiver, and connect the transmitter and receiver, users can upgrade Valens firmware of transmitter and receiver through the RS232 port of the transmitter/receiver.
- When set the Pin 1 of the "SET" DIP switch on the transmitter to "Down" position, the HDMI IN source is replaced with a test signal, and the display shows a red image.

RS232 Pass-Through

RS232 ports can be used for bi-directional RS232 signal pass-through between the transmitter and receiver.

Set both the Pin 2 of the "SET" DIP Switches on the transmitter and receiver to "Up" position.

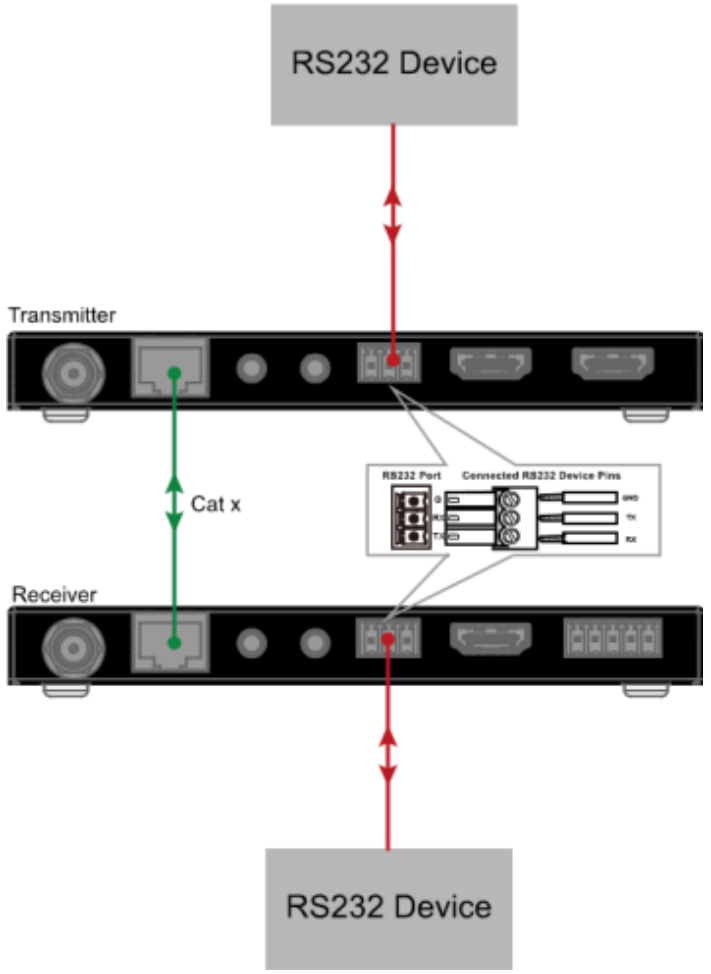

Troubleshooting

1. **Why is there no power to the device?**
   - Ensure the device is powered on.
   - Use the power adapter included in the package.
2. **Why is there no picture, or is the video flashing?**
   - Verify that all devices are powered on and that all cables are properly connected and of good quality.
   - Make sure cable lengths are within the recommended range (see Specifications table).
   - Check that all LED indicators are functioning normally.
   - If you're connecting a source directly to a display, ensure they can work properly.
   - Confirm that the input resolution is supported by the device.
3. **Why is the IR signal weak or not working?**

- Make sure the devices support IR control (not Bluetooth or Wi-Fi).
- Use the IR cables provided in the package and connect them as shown in the Application Diagram.
- Pay attention to the control angles and distances.

IR Cable	IR Emitter	IR Receiver
Suggested Angle	0°	0°
Max Distance	30cm	8m

- When using third-party devices, ensure the pin configuration matches the diagram below:

